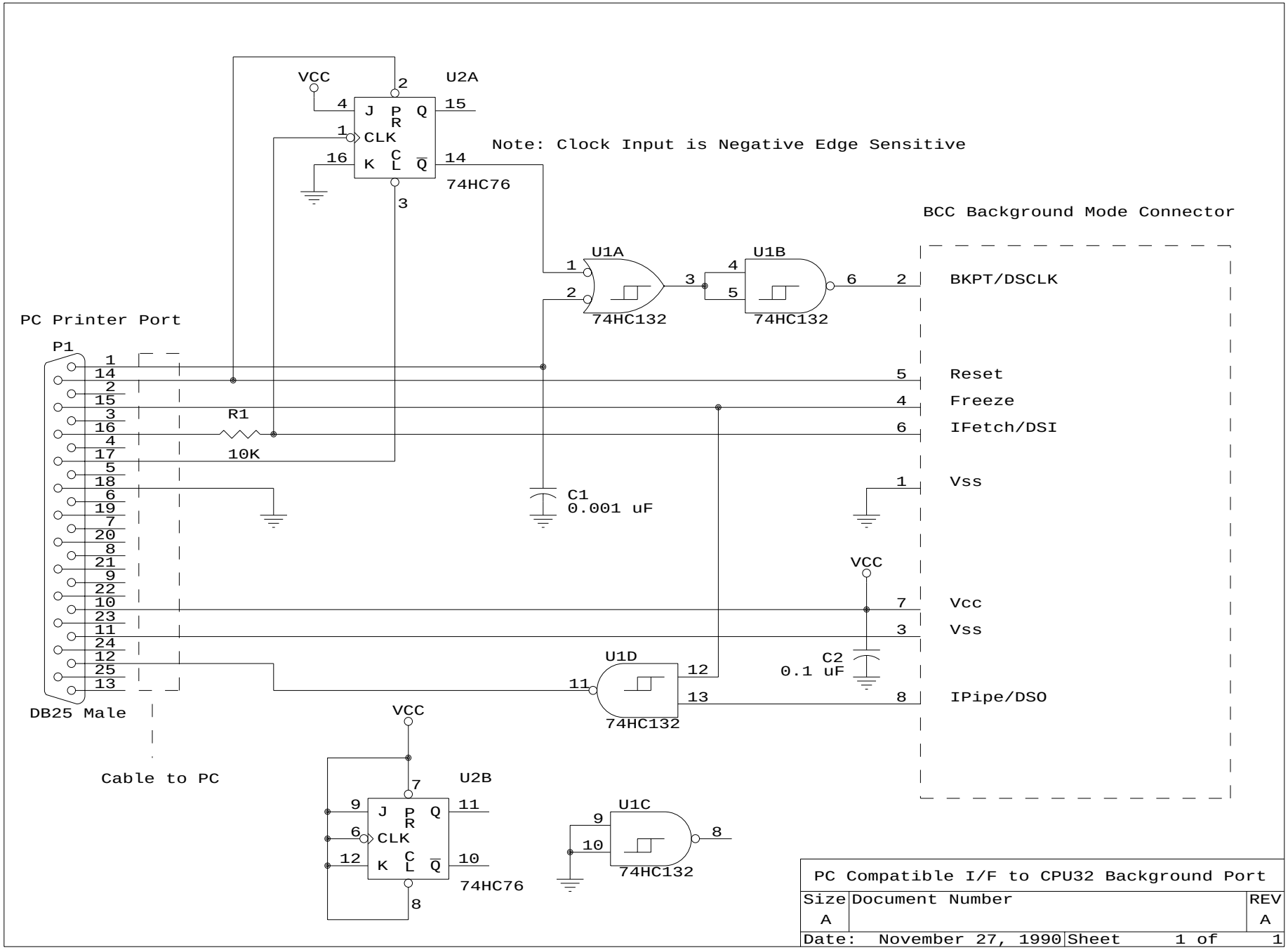
VCC
U2A
J
P
R
Q
CLK
K
C
L
Q
74HC76
Note: Clock Input is Negative Edge Sensitive
BCC Background Mode Connector
U1A
U1B
74HC132
74HC132
BKPT/DSCLK
PC Printer Port
P1
Reset
Freeze
R1
10K
IFetch/DSI
C1
0.001 uF
Vss
VCC
Vcc
Vss
C2
0.1 uF
U1D
74HC132
IPipe/DSO
DB25 Male
VCC
Cable to PC
U2B
74HC76
U1C
74HC132
PC Compatible I/F to CPU32 Background Port
Size
A
Document Number
REV
A
Date: November 27, 1990
Sheet 1 of 1